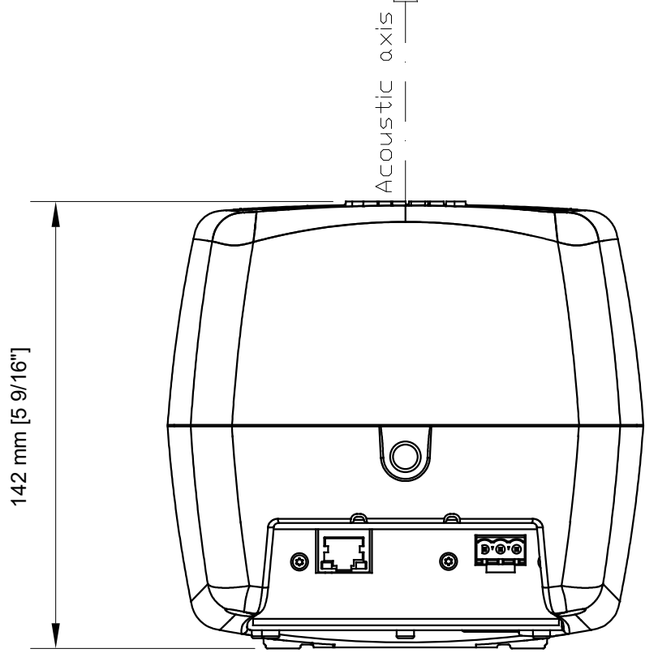
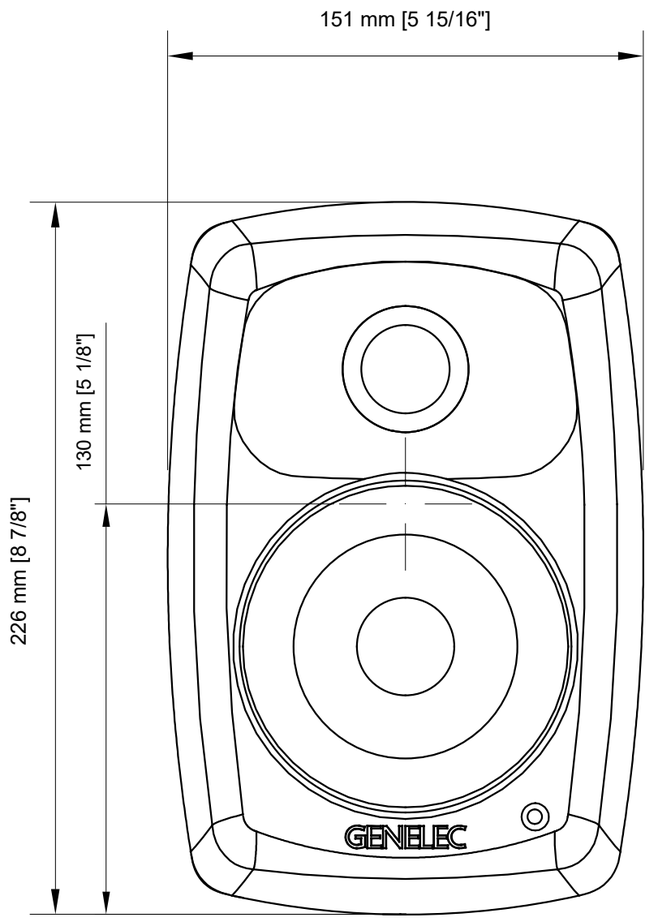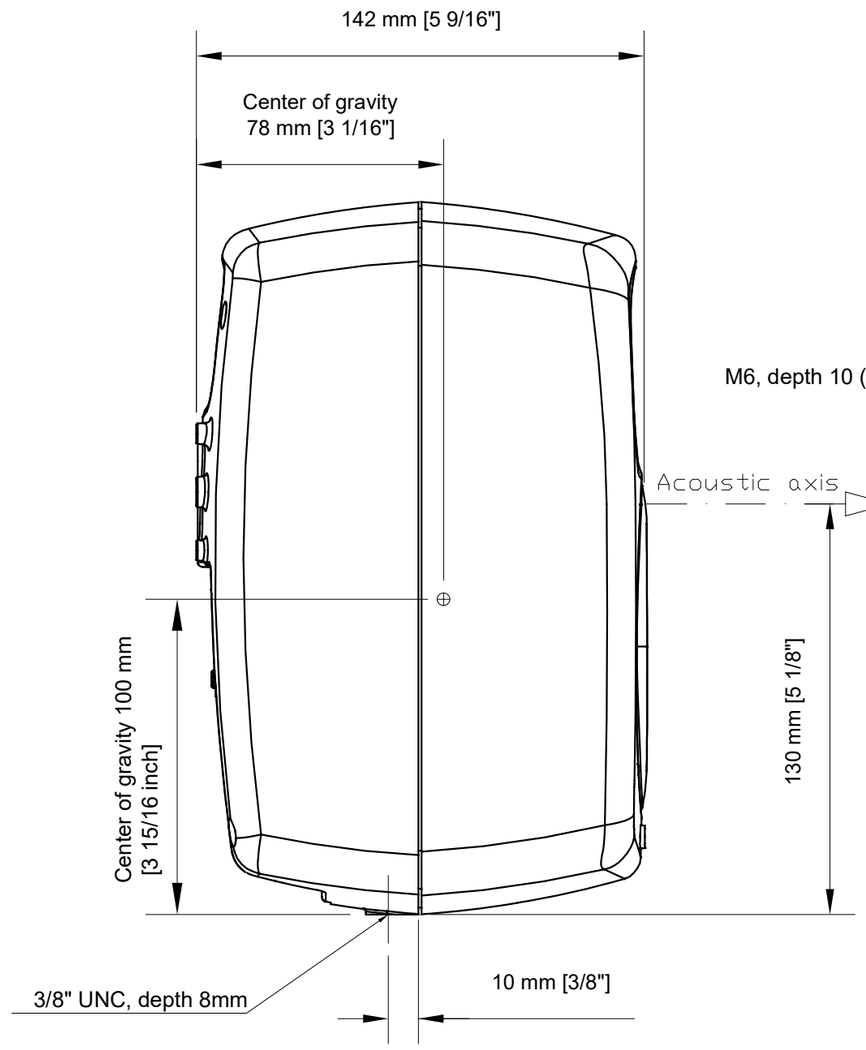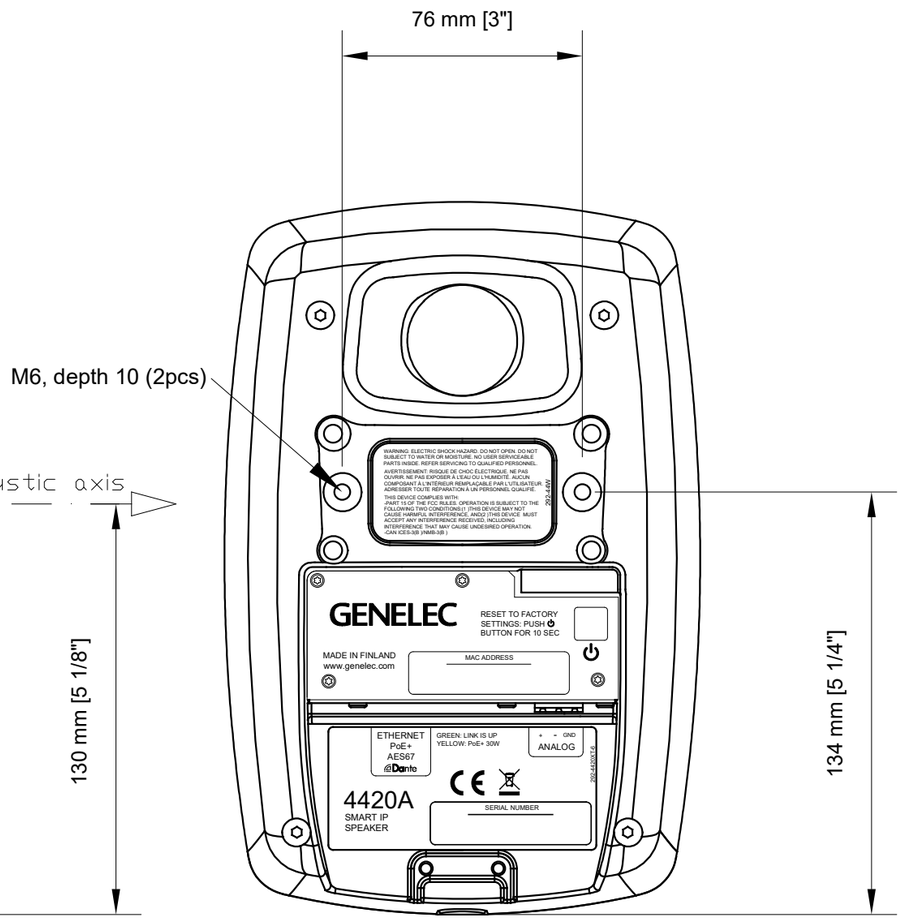
4420A_views
24.6.20/OR